SMART: Instrumented Drill for ISRU Investigations on the Moon

Leo Stolov[1], Kris Zacny[1], Jennifer Heldmann[2], Kathryn Bywaters[1], Carter Fortuin[1], Adrik Shmavonian[1], Sofia Kwok[1], Anthony Colaprete[2], Arwen Dave[2], Richard Elphic[2], Dayne Kemp[2], Keith B. Chin[3]
[1] Honeybee Robotics, 2408 Lincoln Blvd, Altadena CA, 91001 (kazacny@honeybeerobotics.com); [2]NASA Ames Research Center; [3]Jet Propulsion Laboratory

HONEYBEE ROBOTICS
Exploration Technology

Ten Second Summary

SMART (Sensing, Measurement, Analysis, and Reconnaissance Tool) is a next generation drilling system for lunar in-situ resource utilization (ISRU) applications. Unlike TRIDENT, which uses the auger to move drill cuttings up to the surface for analysis, the SMART auger and bit assembly is integrated with instruments that can perform analysis in situ.

Science

The instruments on SMART are selected to characterize the lunar surface, search for water ice, and answer other scientific questions about the lunar poles. SMART also allows missions to make educated and expeditious decisions as to whether downhole samples should be delivered to any rover mounted ISRU instruments (e.g., gas chromatograph mass spectrometer) for further analysis or processing.

List of instruments

1. **Near infrared spectrometer** for volatiles and mineralogical information
2. **Neutron spectrometer** for hydrogen detection
3. **Dielectric spectroscopy** probe for electrical properties
4. **Temperature sensor and heater** for thermal gradient and thermal conductivity measurements
5. **Camera** for visible light images and surface texture
6. **Drill head and linear stage** for regolith strength

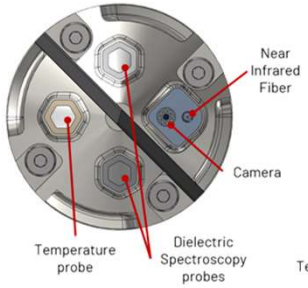

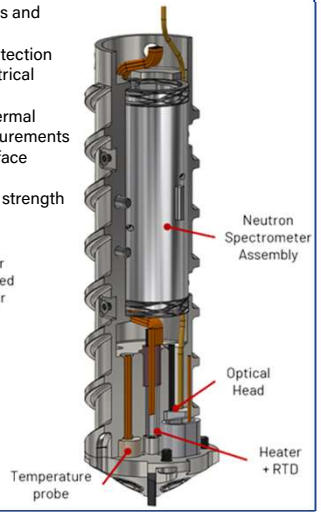

TRL Description

A prototype for SMART has been built to demonstrate drill sensor integration and test instrument functionality in relevant lunar environments. Current TRL of the system is 3-4.
Individually, each instrument technology has been or is being developed for space applications:

Instrument	Existing technology	Existing development	Reference Image
Drill-integrated NIR spectrometer	Ma_MISS	Flying on ExoMars rover in 2024	
Neutron spectrometer	NSS, Intrepid	NSS flying in 2023 as part of VIPER, Intrepid flying on NASA CubeSat program	
Dielectric spectroscopy probe	Prove on AXEL rover system	Tested in Mojave desert	
Temperature sensor and heater	Heat flow probe on LISTER	Flying to the Moon in 2024	
Miniature camera head	ScoutCam 8.0 HD	Operated in orbit on NASA's Robotic Refueling Mission 3 in 2020	
Drilling system / Drill head	TRIDENT	Flying to the Moon as part of Prime-1 and VIPER missions	

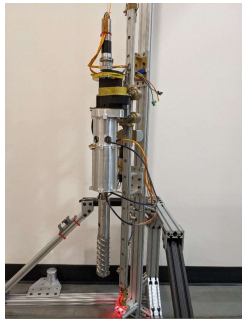

System Overview

SMART consists of several major subsystems: an instrumented drill string, a slip ring and optical connector section, a rotary-percussive drill head, a fiber optic rotary joint (FORJ), and a linear stage. The instrumented auger and bit contain a suite of sensors that characterizes the drilled borehole. The electrical and optical signals from the sensors are passed through the slip ring and FORJ sections to an avionics box. The rotary-percussive drill head provides the auger torque and percussion necessary to drill through lunar regolith. The linear stage assembly is a close copy of the TRIDENT linear stage and is used to provide preload and advance the drill into the subsurface.

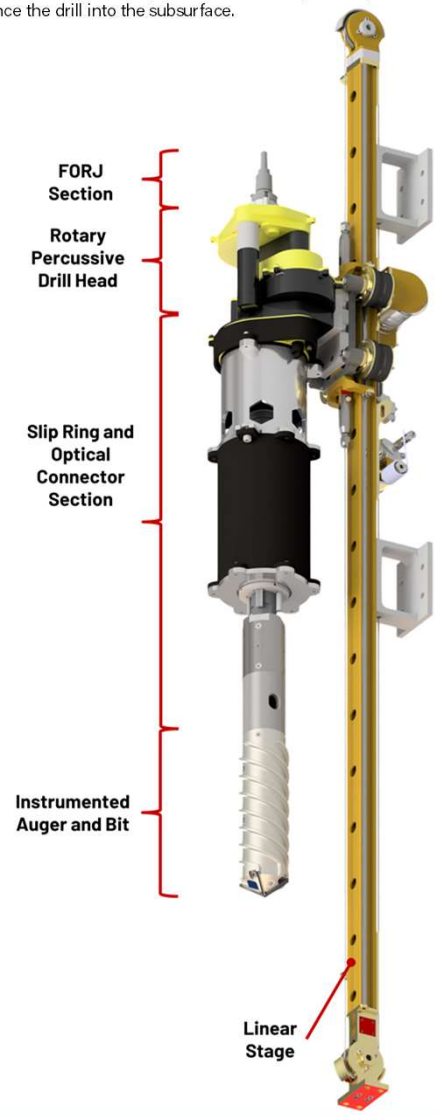

Testing

To date, the drilling system on SMART has been successfully checked out in JSC-1a lunar simulant. Future testing will fully integrate the remaining instruments and their corresponding avionics.

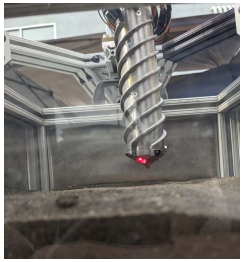

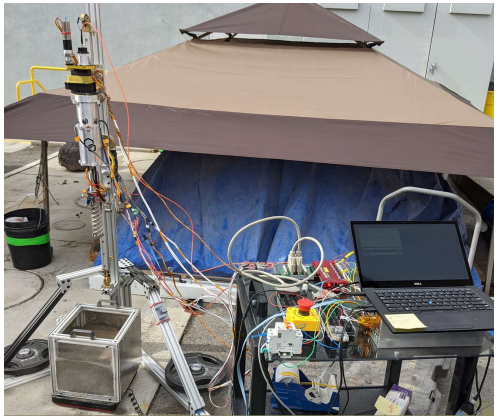

Future Work

A prototype for SMART has been assembled with the goal of demonstrating instrument functionality and testing in a relevant lunar environment. SMART can be mounted to a lander, rover, or even be adapted as a handheld system for high grading on the lunar surface as part of the Artemis program. The drill-integrated instrument payload can also apply to other missions, such as >10-meter drilling system called Rapidly Excavated Borehole for Exploring Lunar Subsurface (REBELS).